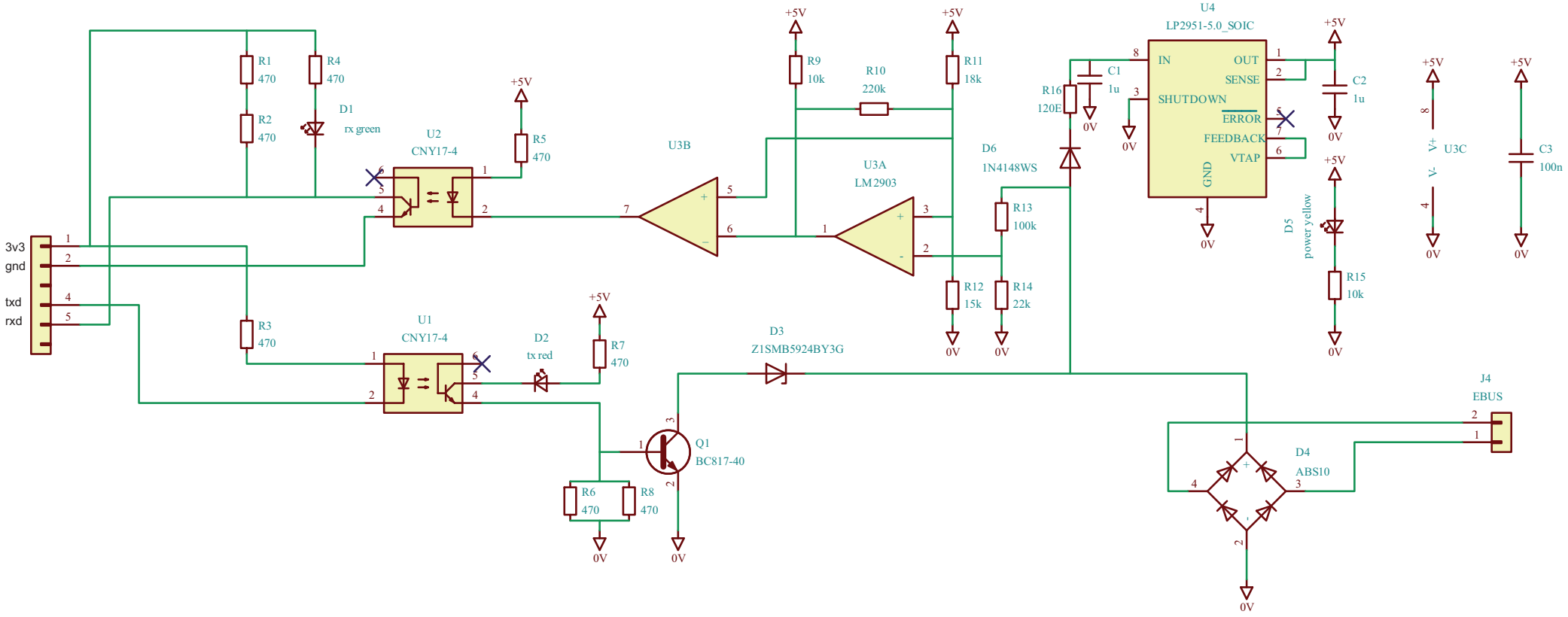
3v3
gnd
txd
rxd
R1
470
R2
470
R3
470
R4
470
D1
rx green
U2
CNY17-4
R5
470
U1
CNY17-4
D2
tx red
R7
470
R6
470
R8
470
Q1
BC817-40
U3B
U3A
LM2903
R9
10k
R10
220k
R11
18k
R12
15k
R13
100k
R14
22k
D6
1N4148WS
D3
Z1SMB5924BY3G
R16
120E
C1
1u
U4
LP2951-5.0_SOIC
IN
OUT
SENSE
SHUTDOWN
ERROR
FEEDBACK
VTAP
GND
C2
1u
D5
power yellow
R15
10k
U3C
C3
100n
D4
ABS10
J4
EBUS
+5V
0V